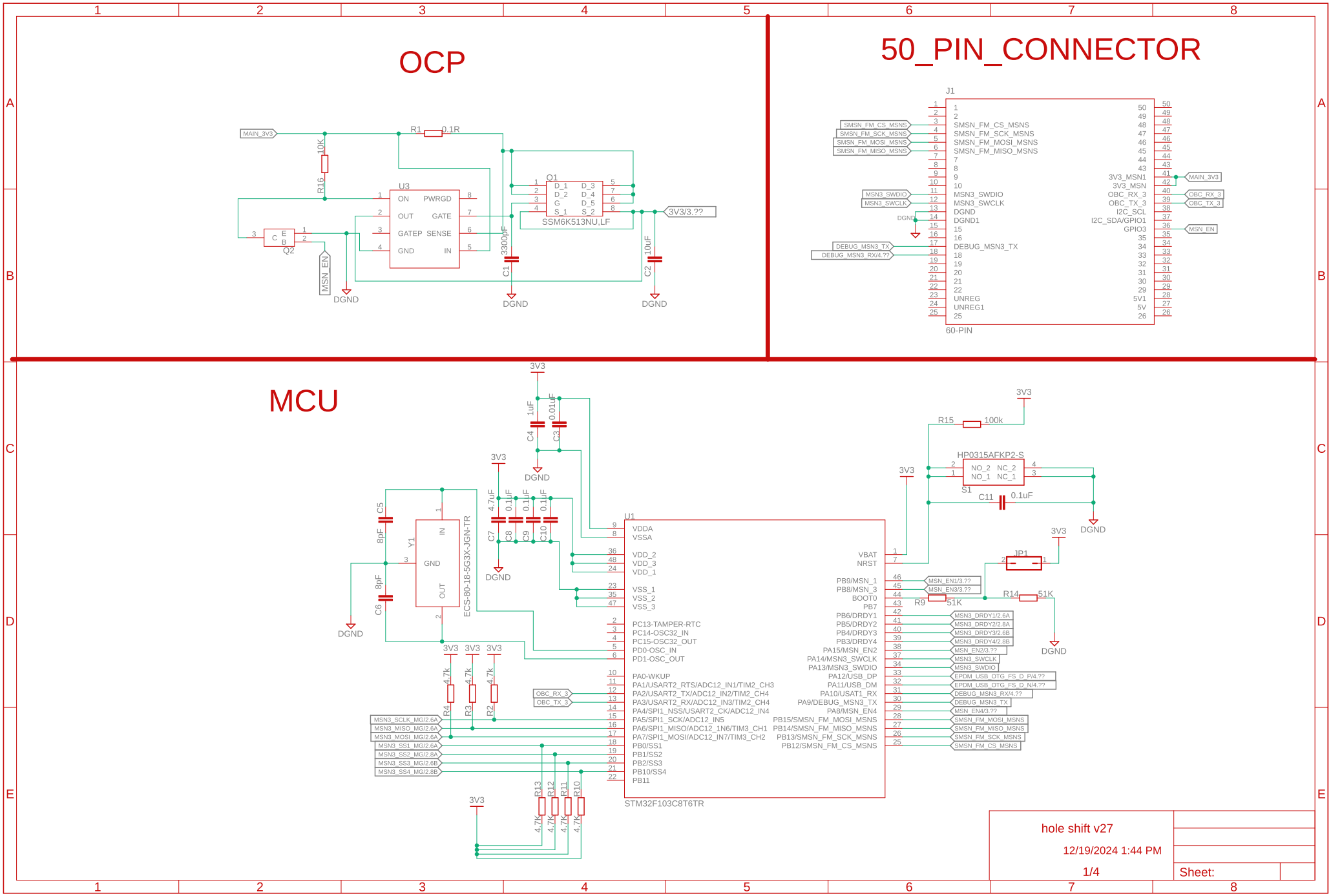
OCP
MAIN_3V3
R1
0.1R
10K
R16
U3
ON
PWRGD
OUT
GATE
GATEP
SENSE
GND
IN
Q1
SSM6K513NU,LF
Q2
MSN_EN
DGND
3300pF
C1
C2
10uF
3V3/3.??
50_PIN_CONNECTOR
J1
SMSN_FM_CS_MSNS
SMSN_FM_SCK_MSNS
SMSN_FM_MOSI_MSNS
SMSN_FM_MISO_MSNS
MSN3_SWDIO
MSN3_SWCLK
DGND
DGND1
DEBUG_MSN3_TX
DEBUG_MSN3_RX/4.??
UNREG
UNREG1
3V3_MSN1
3V3_MSN
OBC_RX_3
OBC_TX_3
I2C_SCL
I2C_SDA/GPIO1
GPIO3
MSN_EN
5V1
5V
60-PIN
MCU
3V3
1uF
0.01uF
C4
C3
4.7uF
0.1uF
C7
C8
C9
C10
C5
C6
8pF
Y1
ECS-80-18-5G3X-JGN-TR
U1
VDDA
VSSA
VDD_2
VDD_3
VDD_1
VSS_1
VSS_2
VSS_3
PC13-TAMPER-RTC
PC14-OSC32_IN
PC15-OSC32_OUT
PD0-OSC_IN
PD1-OSC_OUT
PA0-WKUP
PA1/USART2_RTS/ADC12_IN1/TIM2_CH3
PA2/USART2_TX/ADC12_IN2/TIM2_CH4
PA3/USART2_RX/ADC12_IN3/TIM2_CH4
PA4/SPI1_NSS/USART2_CK/ADC12_IN4
PA5/SPI1_SCK/ADC12_IN5
PA6/SPI1_MISO/ADC12_1N6/TIM3_CH1
PA7/SPI1_MOSI/ADC12_IN7/TIM3_CH2
PB0/SS1
PB1/SS2
PB2/SS3
PB10/SS4
PB11
VBAT
NRST
PB9/MSN_1
PB8/MSN_3
BOOT0
PB7
PB6/DRDY1
PB5/DRDY2
PB4/DRDY3
PB3/DRDY4
PA15/MSN_EN2
PA14/MSN3_SWCLK
PA13/MSN3_SWDIO
PA12/USB_DP
PA11/USB_DM
PA10/USAT1_RX
PA9/DEBUG_MSN3_TX
PA8/MSN_EN4
PB15/SMSN_FM_MOSI_MSNS
PB14/SMSN_FM_MISO_MSNS
PB13/SMSN_FM_SCK_MSNS
PB12/SMSN_FM_CS_MSNS
STM32F103C8T6TR
R15
100k
HP0315AFKP2-S
S1
C11
0.1uF
JP1
R9
51K
R14
51K
MSN_EN1/3.??
MSN_EN3/3.??
MSN3_DRDY1/2.6A
MSN3_DRDY2/2.8A
MSN3_DRDY3/2.6B
MSN3_DRDY4/2.8B
MSN_EN2/3.??
MSN3_SWCLK
MSN3_SWDIO
EPDM_USB_OTG_FS_D_P/4.??
EPDM_USB_OTG_FS_D_N/4.??
DEBUG_MSN3_RX/4.??
DEBUG_MSN3_TX
MSN_EN4/3.??
SMSN_FM_MOSI_MSNS
SMSN_FM_MISO_MSNS
SMSN_FM_SCK_MSNS
SMSN_FM_CS_MSNS
OBC_RX_3
OBC_TX_3
4.7k
R4
R3
R2
MSN3_SCLK_MG/2.6A
MSN3_MISO_MG/2.6A
MSN3_MOSI_MG/2.6A
MSN3_SS1_MG/2.6A
MSN3_SS2_MG/2.8A
MSN3_SS3_MG/2.6B
MSN3_SS4_MG/2.8B
R13
R12
R11
R10
4.7K
hole shift v27
12/19/2024 1:44 PM
1/4
Sheet:

RM3100_SENSOR_1

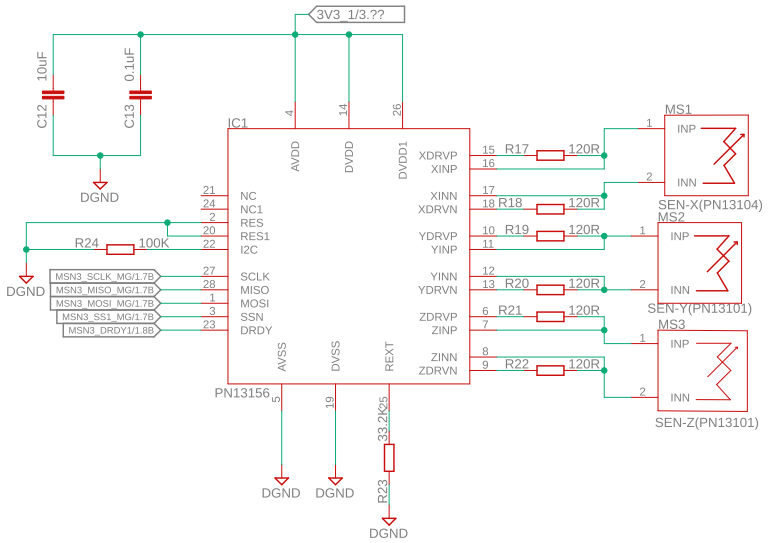

RM3100_SENSOR_2

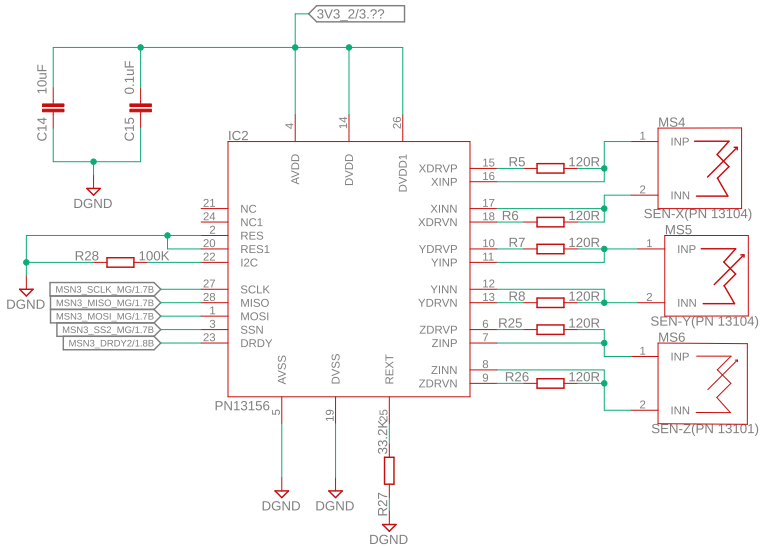

RM3100_SENSOR_3

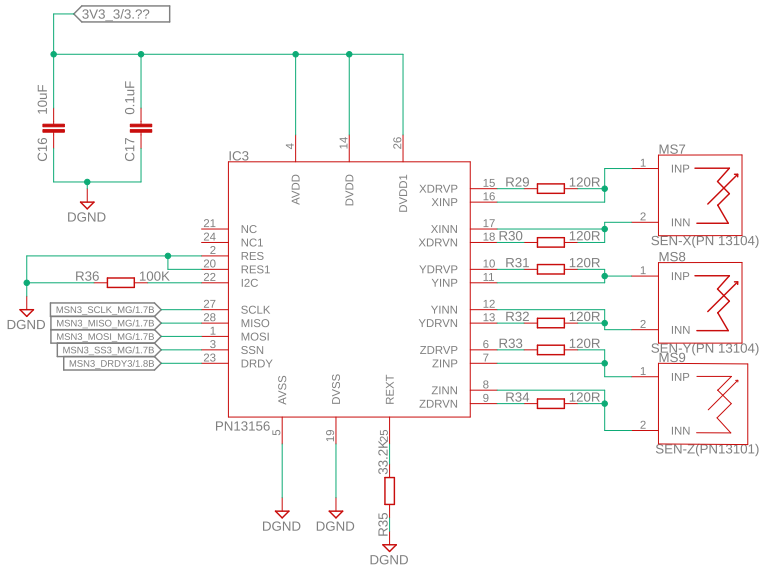

RM3100_SENSOR_4

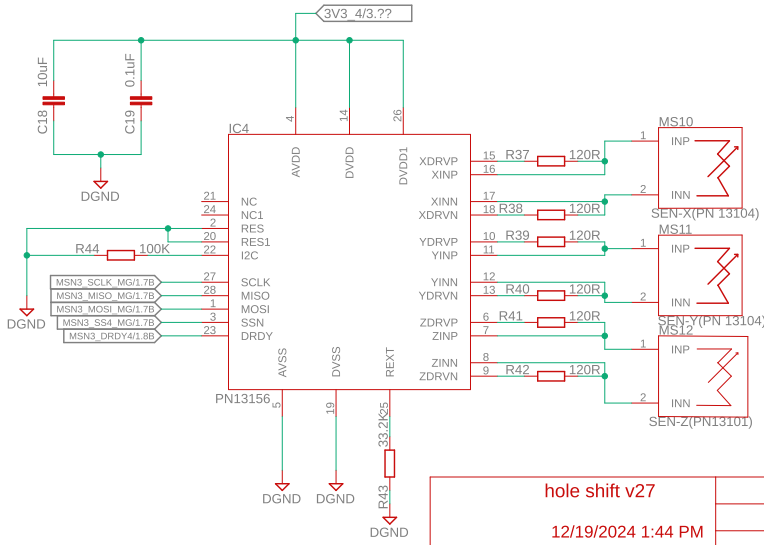

hole shift v27	
12/19/2024 1:44 PM	
2/4	Sheet:

OCP_1

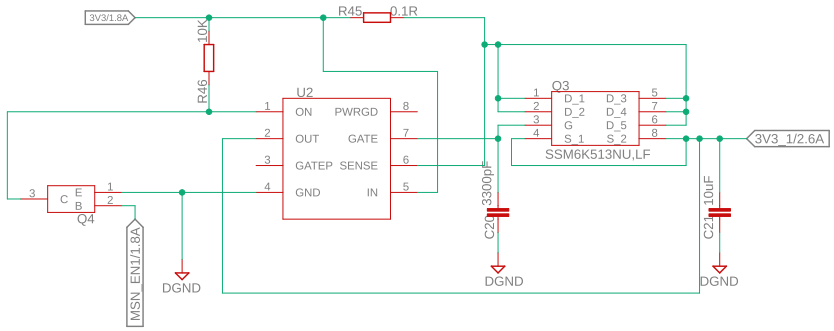

OCP_2

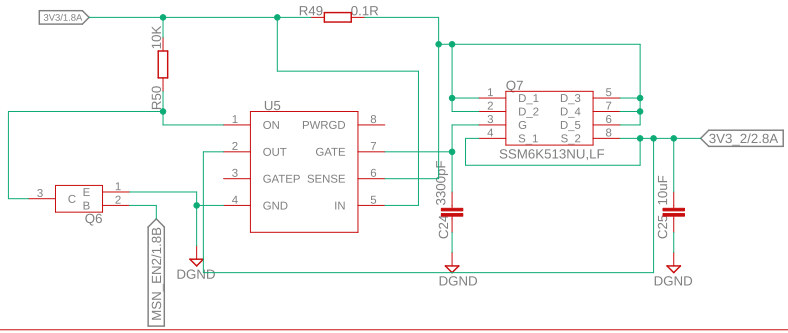

OCP_3

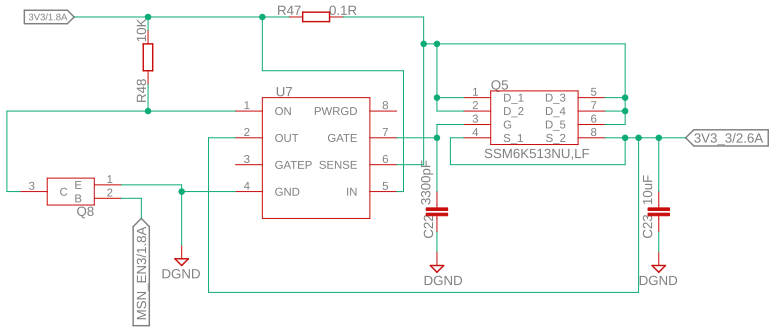

OCP_4

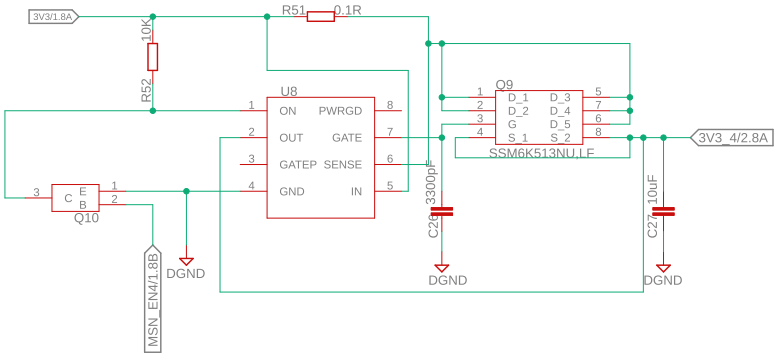

Title: hole shift v27	
Version:	
12/19/2024 1:44 PM	
Drawn By:	3/4

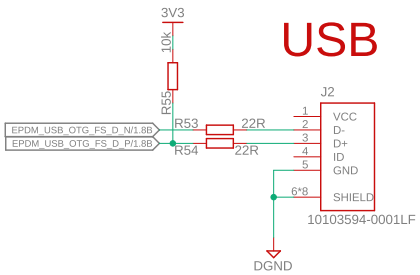

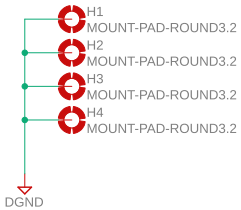



Title: hole shift v27	
Version:	
12/19/2024 1:44 PM	
Drawn By:	4/4